OPSK
ONE-PIPE STEAM VALVE ASSEMBLY

OPERATION

The Macon one-pipe steam valve assembly consists of the reliable MTW direct mounting thermostat. The thermostatic head contains a temperature sensitive wax which expands and contracts on a rise and fall of temperature in the sensed area. When the temperature rises above the temperature selected, pressure from the expanding wax closes the valve, preventing or restricting the flow of steam through the radiation unit. When the room temperature drops below the selected temperature, the valve opens and allows an increase of steam flow through the radiation unit. This modulating process continues automatically to maintain the temperature you selected. The OPSK controls room temperature by regulating the amount of air and steam in the radiator.

FEATURES & BENEFITS

- Compact dimensions
- Nickel-plated, forged brass valve
- Thermostat may be locked at or limited to any desired temperature or temperature range
- Actuators may be changed without shutting down the system
- Valve may be installed by dropping the system down to zero pressure
- Individual room control for greater comfort
- Replaceable insert
- Stainless steel spindle
- Fuel savings up to 30%
- Nonelectric - fully automatic
- Prevents over- and under-heating
- Reliability
- Remote thermostats available - call or write for the distributor nearest you!
- Vent and vacuum breaker included
- The OPSK helps to minimize large temperature swings inherent in one pipe steam systems.

Important:

1. Installing the OPSK does not eliminate other controls in the system. The boiler must be cycled in some manner so that condensate can return to the boiler and eliminate boiler flooding.
2. If the boiler is cycled from a space thermostat in one zone, do not apply a radiator valve to that zone's radiation.
3. Do not apply a radiator valve in a one-pipe steam system that does not use steam air vents venting to the atmosphere on each radiation unit.
4. The VB-18 vacuum breaker is recommended and assists in the return of condensate. Integral installation reduces vacuum problems.
5. Very effective with system pressure range 0-1½ PSI. Suggested maximum operating pressure 2 PSI.

118 Exchange Street · Chicopee, MA 01013
www.tunstall-inc.com

Tunstall

Phone (413) 594-8695 · Fax (413) 598-8109
www.maconcontrols.com

© December 2004

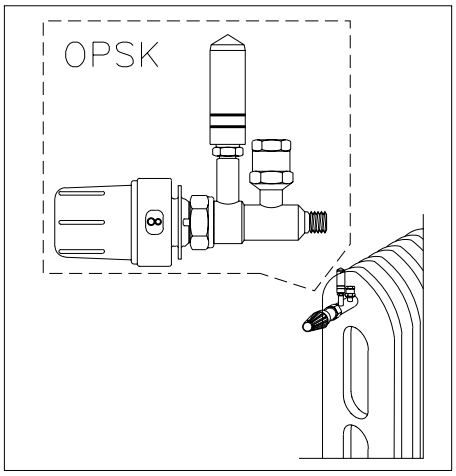

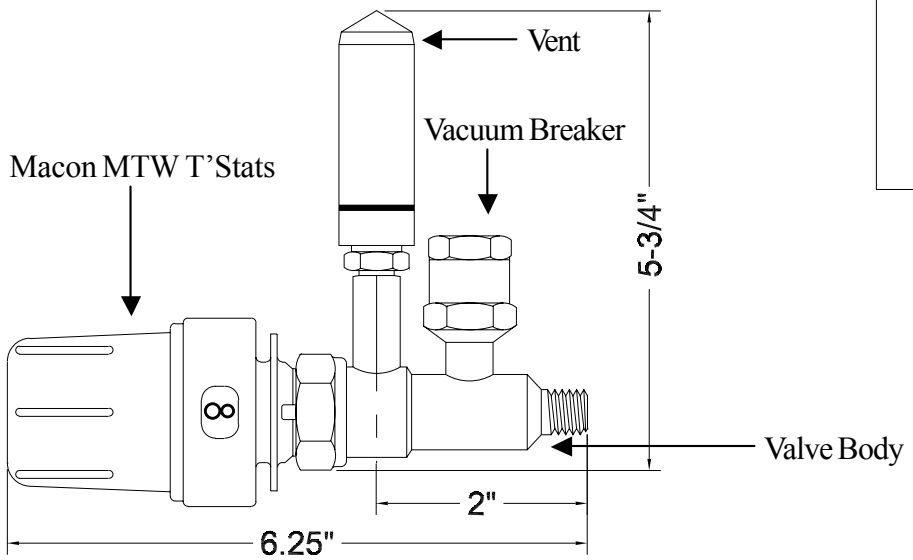

DATA - One-pipe Steam Valve Assembly

Maximum temperature: 248°F
Disc Material: EPDM
Valve body material: Forged, nickel-plated brass
Body style: Angle pattern
Connections: 1/8" male NPT, fits in vent tapping of the radiator
Temperature range: 46°-82°F

Maximum movement: .125 (3mm)
Movement per 1°F change in ambient: .007 (.15mm)

Note: Additional information and installation instructions can be found in Technical & Service Section.

Dial Setting	0	*	1	3	5	6	7	8	9
Room Temperature (F)	Off	46°	54°	61°	68°	72°	76°	80°	82°

118 Exchange Street · Chicopee, MA 01013
www.tunstall-inc.com

Phone (413) 594-8695 · Fax (413) 598-8109
www.maconcontrols.com

We reserve the right to alter designs, specifications and information without notice.